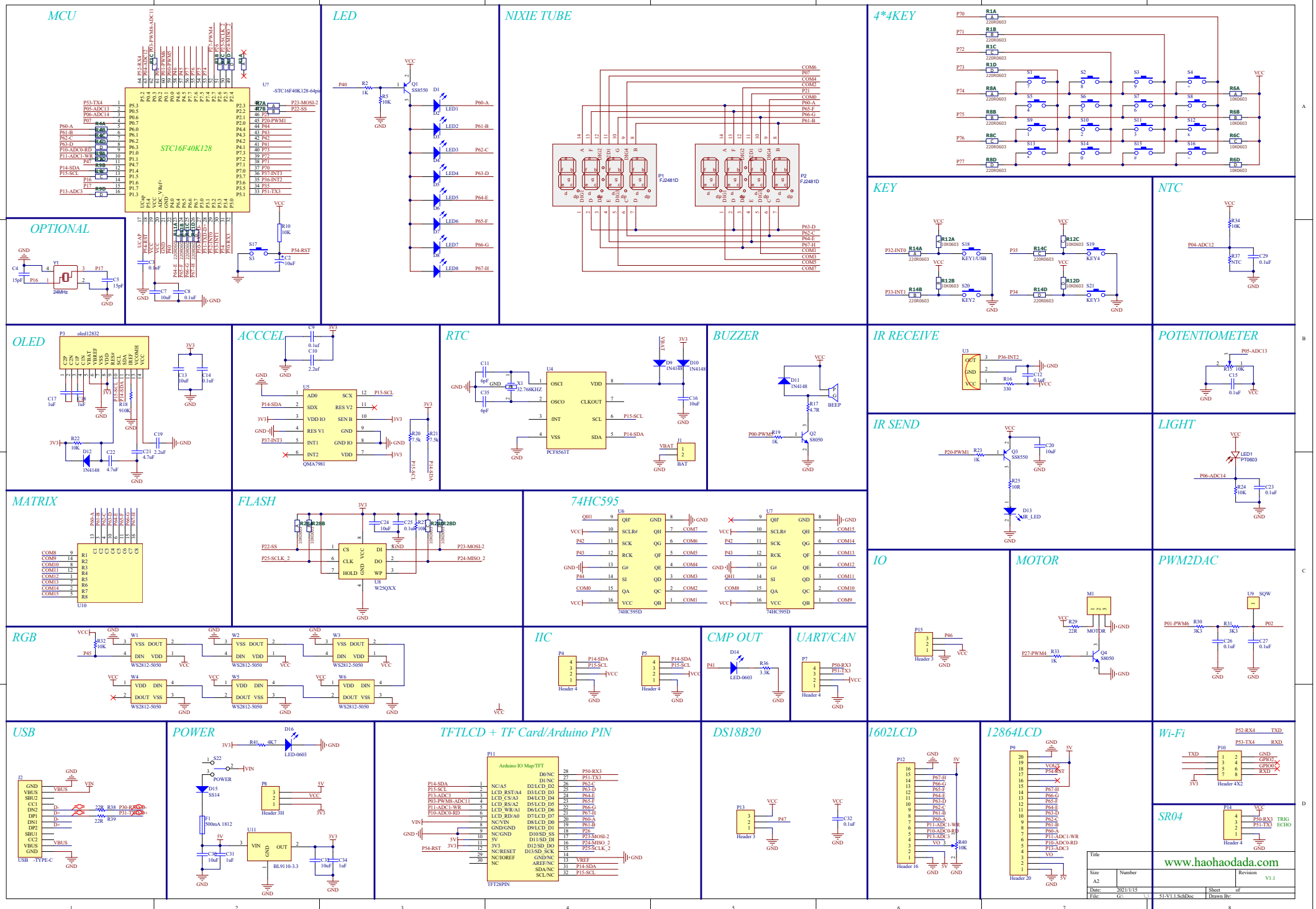
MCU
STC16F40K128
LED
NIXIE TUBE
4*4KEY
KEY
NTC
OPTIONAL
OLED
ACCCEL
RTC
BUZZER
IR RECEIVE
POTENTIOMETER
IR SEND
LIGHT
MATRIX
FLASH
74HC595
IO
MOTOR
PWM2DAC
RGB
IIC
CMP OUT
UART/CAN
USB
POWER
TFTLCD + TF Card/Arduino PIN
DS18B20
1602LCD
12864LCD
Wi-Fi
SR04
www.haohaodada.com